DURABLE MOULDS AND

CUSTOMIZED PRODUCTS

PP IRRIGATION SYSTEMS MOULDS

POLİNAR®

her şey çekirdekten gelişir

MATERIALS

PP / PE / POM
Filled Polymers

TECHNOLOGIES

- Durable mechanism
- Stainless steel cores and pins
- Quick cycle time
- Effective cooling system
- Robust POLINAR core system
- POLINAR CAM system - core pulling
- POLINAR hot runner manifold system

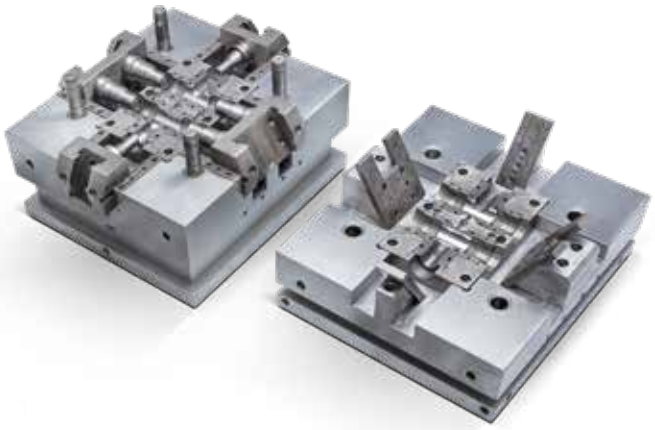

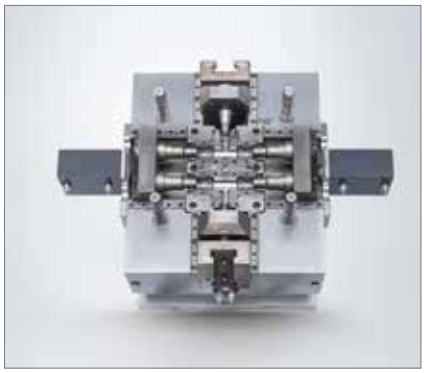

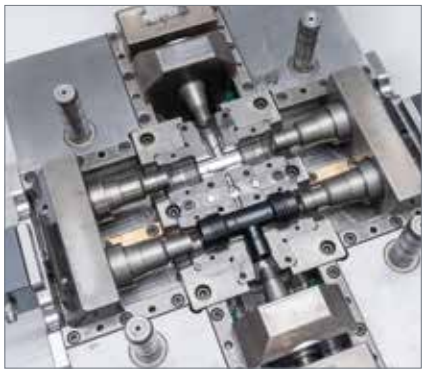

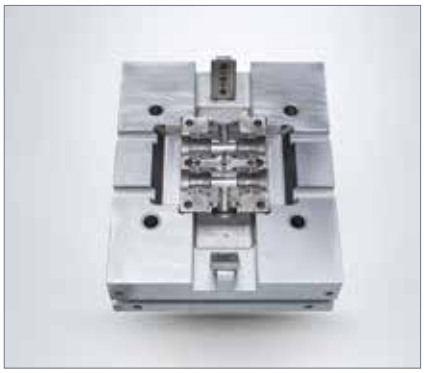

Durable Moulds
and Customized Products

POLİNAR®
her şey çekirdekten gelişir

POLİNAR PLASTİK MAKİNE ve KALIP SANAYİ
TİCARET LİMİTED ŞİRKETİ
İkitelli O.S.B Eskoop San. Sit. D Blok
No: 34 Başakşehir / İSTANBUL - TURKEY

Phone : +90 212 549 88 20 – 21
Fax : +90 212 549 88 19
E-Mail : info@polinar.com.tr

www.polinar.com.tr

PTE (POLİNAR TEST EQUIPMENT)
İkitelli O.S.B. Eskoop San. Sit.
D Blok No.34 Başakşehir
İstanbul / TURKEY

Phone : +90 212 549 88 20 – 21
Fax : +90 212 549 88 19
E-Mail : info@polinar.com.tr

www.pte.com.tr

POLINAR GmbH
THE ICON VIENNA, Tower 24
Wiedner Gürtel 13 1100
Vienna AUSTRIA

Phone : +43 (0) 1 253535 4044
Fax : +43 (0) 1 253535 4044
Mobile : +43 676 5983869
E-Mail : office@polinar.at

www.polinar.at